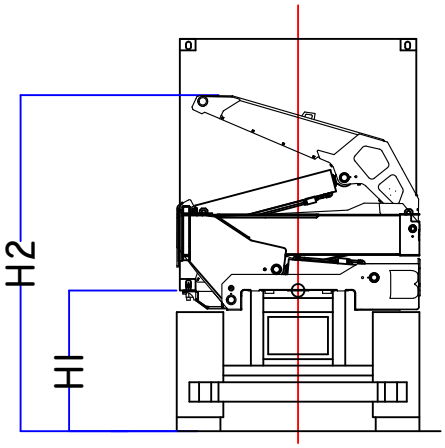

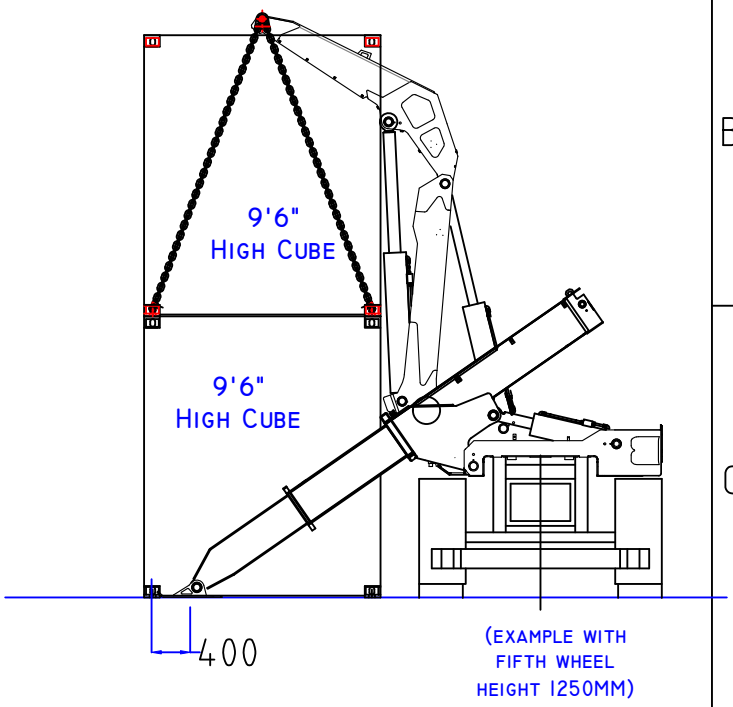

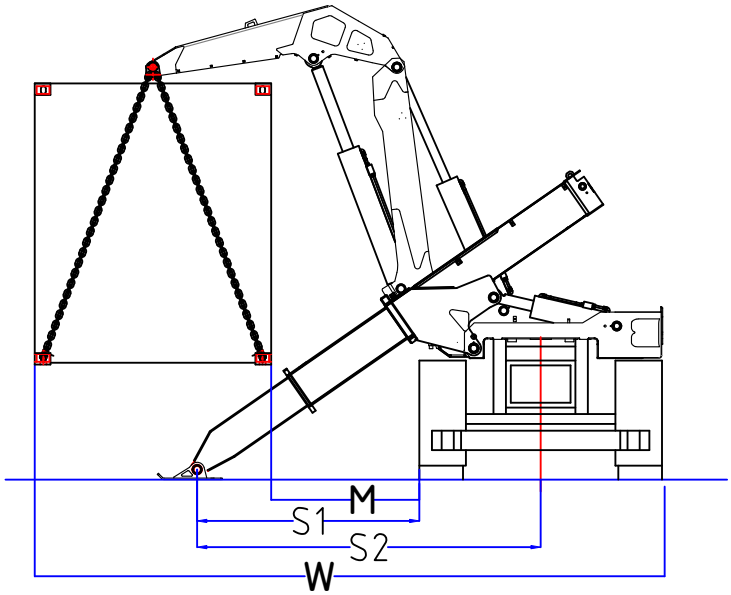

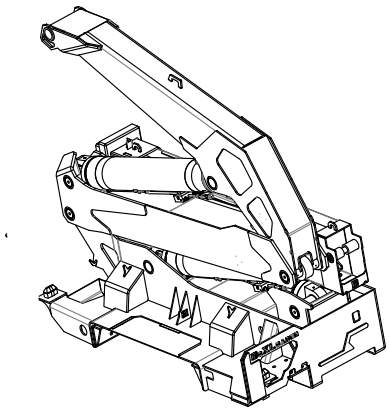

S1	Stabilizer distance	2300
S2	Distance foot plate to center of trailer chassis	3550
H1	Load height	FROM 1200 TO 1700mm
H2	Transport position height	H1 + 2000mm
HT MIN	Min work height	H1 + 2900mm
HT MAX	Maw work height (depending on trailer height)	H1 + 4890mm
L	Overall width	2500mm
M	Container distance	0 to 1500mm
Référence	Ratings/Lifting capacity	44t

BOXLOADER www.boxloader.com

CRANE DATA SHEET
XTREM - DOUBLE EXTENSION STABILIZER

21/06/2019