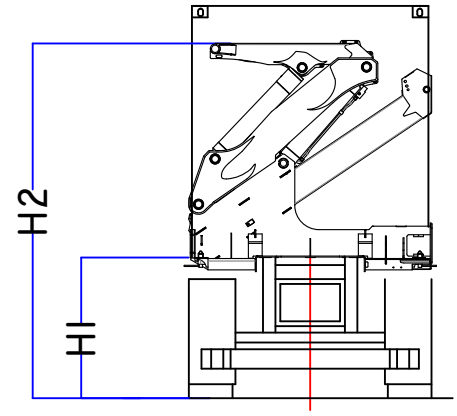

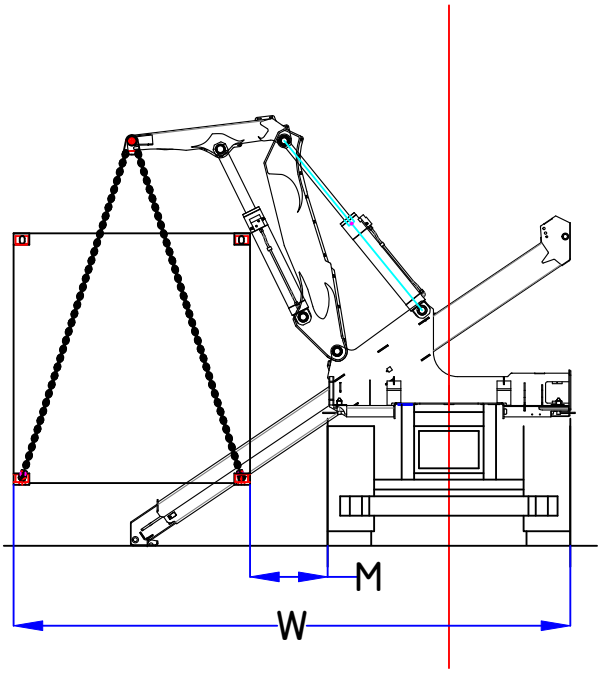

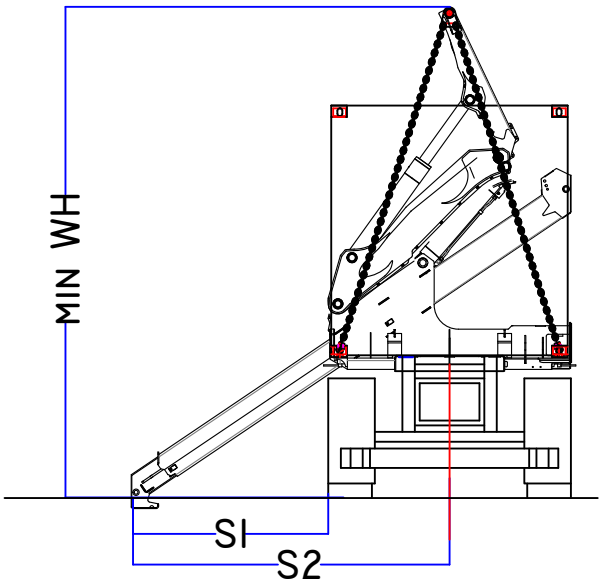

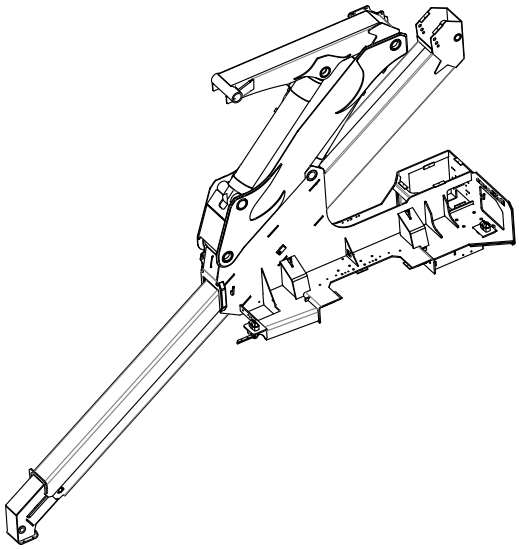

S1	Stabilizer distance	2025mm
S2	Distance foot plate to center of trailer chassis	3260
H1	Load height	FROM 1100 TO 1600mm
H2	Transport position height	H1 + 2200mm
HT MIN	Min work height	H1 + 3600mm
HT MAX	Maw work height (depending on trailer height)	H1 + 4000mm
L	Overall width	2500mm
M	Container distance	0 to 700mm
Référence	Ratings/Lifting capacity	SPEEDLOADER

BOXLOADER

www.boxloader.com

CRANE DATA SHEET
SPEEDLOADER